PLACER ARM COMPLETE (4-PLC01A, 4-PLC02B, 4-PLC03C, 4-PLC04D)

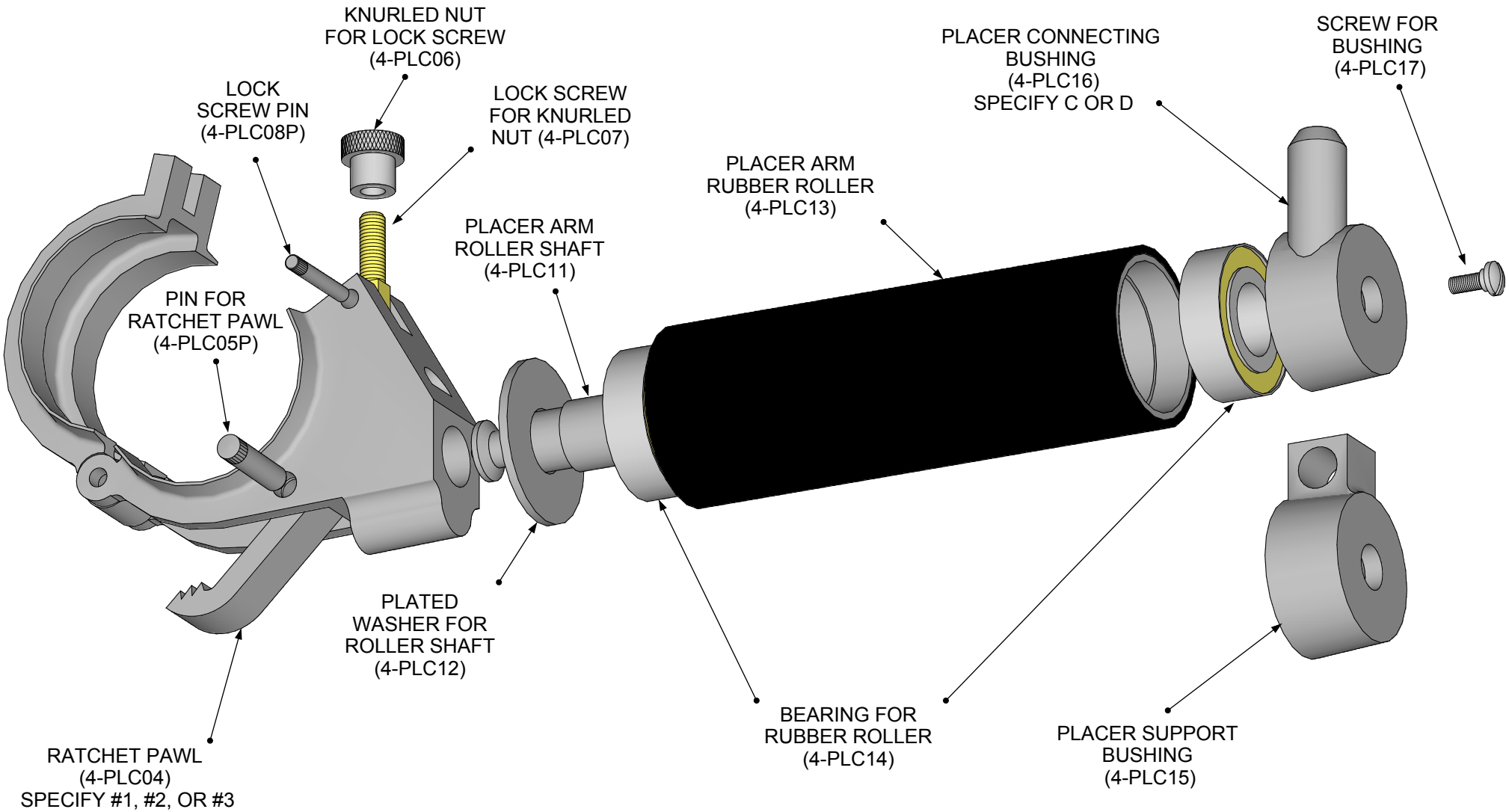

FRIGID FLUID COMPANY ▪ 11631 W. GRAND AVENUE ▪ NORTHAKE, IL 60164

1-708-836-1215 **www.frigidfluidco.com/device**